TM 9-1240-311-34

DEPARTMENT OF THE ARMY TECHNICAL MANUAL

DIRECT SUPPORT AND GENERAL SUPPORT MAINTENANCE MANUAL

FOR
TELESCOPE, ARTICULATED: M127 (1240-437-1254)

AND M127A1 (M127E1) (1240-148-8539) AND
HANGER ASSEMBLY (1240-906-79451

This copy is a reprint which includes current pages from Change 1

HEADQUARTERS, DEPARTMENT OF THE ARMY
JUNE 1972

TECHNICAL MANUAL

No. 9-1240-311-34

HEADQUARTERS
DEPARTMENT OF THE ARMY
WASHINGTON, D.C. *13 June 1972*

Direct Support and General Support Maintenance Manual
TELESCOPE, ARTICULATED: M127 (1240-437-1254), M127A1 (M127E1) (1240-148-8539) AND HANGER ASSEMBLY (1240-906-7945)

*This manual, together with TM 9-1240-311-34P, 16 November 1971, and DMWR 9-1240-311, December 1969, supersedes TM 9-1240-311-35, 25 April 1966 in its entirety.

LIST OF ILLUSTRATIONS

CHAPTER 1

INTRODUCTION

Section I. GENERAL

1-1. Scope

a. This publication contains instructions for repair of articulated telescope M127, M127A1 (M127E1) and associated equipment, by direct support (DS) and general support (GS) maintenance shops.

b. Instructions for operation, lubrication, and preventative maintenance of this instrument at the operator and organizational levels are contained in TM 9-2350-230-12.

1-2. Forms and Reports

a. Maintenance Forms and Records. Maintenance forms, records, and reports which are to be used by maintenance personnel at all maintenance levels are listed and prescribed by TM 38-750.

b. Reporting of Errors. The reporting of errors, omissions, and recommendations for improving this publication by the individual user is encouraged. Reports should be submitted on DA Form 2028 (Recommended Changes to Publications) and forwarded directly to the Commanding Officer, Frankford Arsenal, ATTN: SARFA-W3100, Philadelphia. PA 19137.

Section II. DESCRIPTION AND DATA

1-3. Description (Fig. 1-1)

a. Articulated telescope M127 and M127A1 (M127E1) (fig. 1-1) are hermetically sealed, dual power, instrument used for direct fire control of the conventional (152MM) round and part of the guidance and control group for the Shillelagh missile, the main armament system of the armored reconnaissance airborne assault vehicle, M551. The telescope is supported in the vehicle by telescope mount M149, and hanger assembly (8) described in Chapter 4. The articulated joints (4 and 10) permits the gunner to view the target through the full range of gun elevation and depression.

b. The filter selector lever (3) is used to select one of two filters, or a clear glass plate, as required. The dual power unit (6) contains an optical assembly which is placed into the field-of-view by means of a selector lever to increase magnification of the telescope from 8 to 12 power. A diopter adjustment knob (9) permits focusing of the telescope to the eye of the observer. Parallax is corrected by rotating the parallax adjustment (a slotted screw (5)) on top of the filter housing at the articulated joint. The reticle projector assembly (11) is separately housed on the underside of the telescope in front of the articulated joint. The assembly induces two reticle patterns, one for the guided missile the other for the conventional round. separately into the field-of-view by means of optical projection. Selection of reticles is made by actuating a switch (gunner's control panel) to illuminate either reticle pattern.

1-4. Data

a. General.

Length	41-1/4 in.
Weight	33 lbs
Electrical power source	24-28 VDC

b. Operating Limits.

Elevation	20 degrees
Depression	10 degrees

c. Characteristics.

Magnification	3 or 12 power
	8 power -8.0 degrees
Field-of-view	12 power -5.338 degrees
Clear eye distance	1.31 in.
Diameter of exit pupil	8 power -7MM 12 power -4.7MM
Effective focal length of objective	12.00 in.
Diopter range	±4 diopters

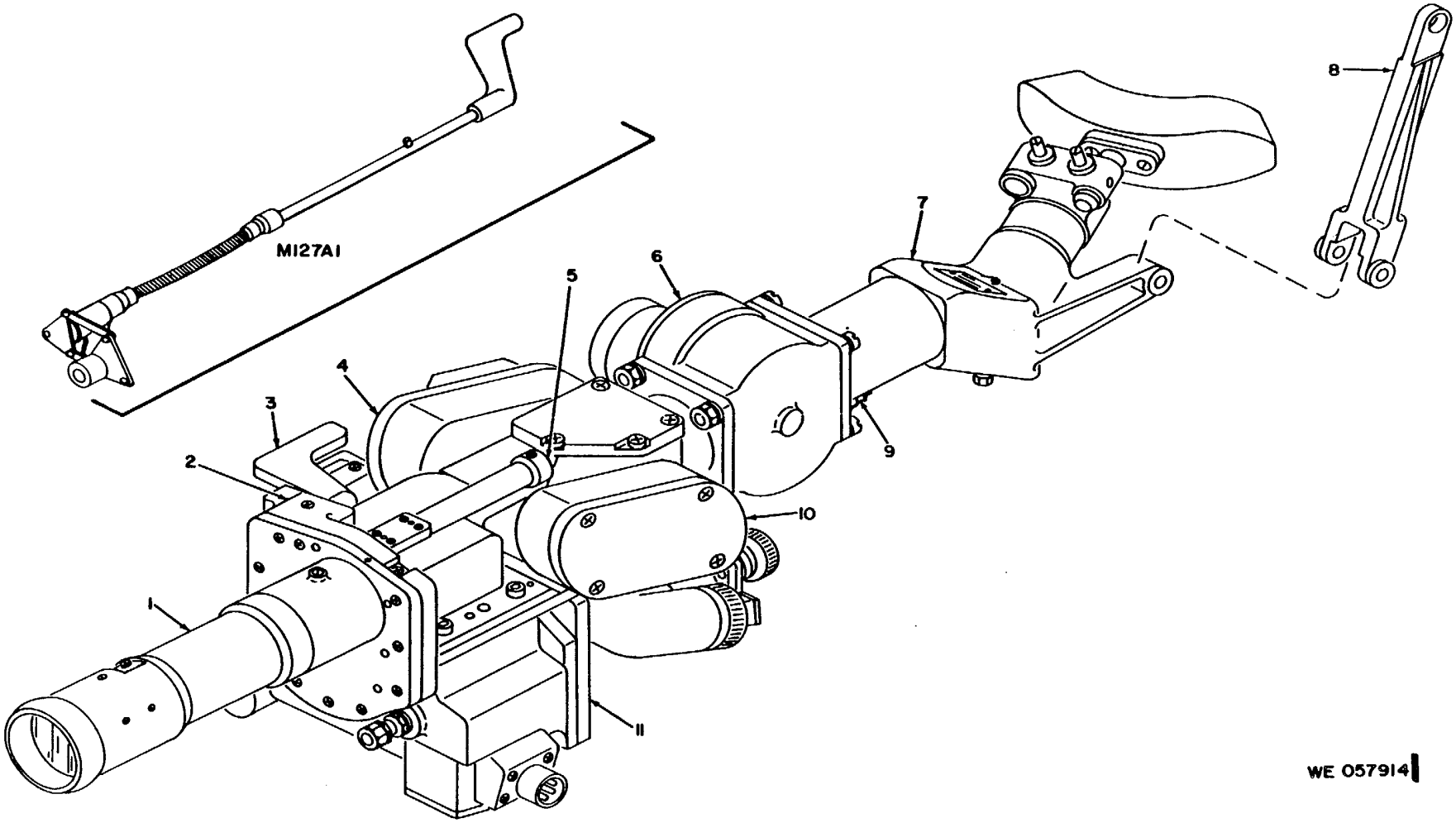

Figure 1-1. Articulated telescope M127 and M127A1 (M127E1) with hanger assembly--assembled view.

1-Objective tube assembly
2-Filter housing assembly
3-Filter selector lever
4-Porro prism housing (articulated joint-optical)
5-Parallax adjustment
6-Dual power assembly
7-Eyepiece assembly
8-Hanger assembly
9-Diopter adjustment knob
10-Articulated joint-mechanical
11-Reticle projector assembly

Figure 1-1-Continued.

CHAPTER 2

DIRECT SUPPORT AND GENERAL SUPPORT MAINTENANCE INSTRUCTIONS

Section I. REPAIR PARTS, SPECIAL TOOLS AND EQUIPMENT

2-1. Special Tools and Equipment

Special tools and equipment necessary to perform operations described in this manual are listed in table 2-1. Special tool sets of a general nature are authorized by TA and TOE.

2-2. Direct Support and General Support Maintenance

Repair Parts Repair parts are listed and illustrated in TM 9-1240311-34P. Maintenance instructions contained herein pertain only to replacement of repair parts authorized at the direct support and general support maintenance levels.

Table 2-1. Special Tools and Equipment

Item	FSN or Part No.	Reference		Use
		Fig. No.	Para. No.s	
Adapter, Sealing 8-32 UNC-2	4930-107-4378		3-15b	Used with gun, sealing 4931-764-8134
Dioptometer	4931-536-5557		3-7g	To make optical checks when removing parallax and adjusting for sharp eyepiece focus.
Gun Sealing Hydraulic	4931-764-8134		5-3b	Used with adapter 4930-107-4378 to inject sealing compound.
Wrench, Spanner, Adjustable, Pin Type	5120-595-8996		3-16 3-17 3-19	Used to remove and replace screws 8590832 and 8624629, retainer 10533426, and studs 8624623 and 8624624.

Section II. TROUBLESHOOTING

2-3. General

Troubleshooting is a systematic means of determining by symptoms, malfunctions within the instrument. Adherence to procedures covered herein will materially reduce the time required to locate trouble and restore the instrument to normal operation.

Troubleshooting performed by lower levels of maintenance are listed in TM 9-2350-230-12.

2-4. Procedure

Table 2-2 lists troubleshooting peculiar to direct support and general support maintenance levels.

Table 2-2. Troubleshooting

Malfunction	Probable Cause	Corrective Action
Headrest is not held in secured position when placed in bracket.	a. Plunger not securing headrest.	*a.* Replace spring (9, fig. 3-2). Para 3-4.
	b. Support on headrest not alined with plunger.	*b.* Check support (4, fig. 3-2), straight en if bent

Table 2-2. Troubleshooting--Continued

Malfunction	Probable Cause	Corrective Action
Image not clear or out of focus.	*a.* Dirt on entrance or exit optics. *b.* Diopter knob not adjusted to cover a minimum span of +4.00 to -4.00 diopters.	*a.* Clean surfaces of optics. *b.* Adjust knob. Para 3-7a and g.
Reticle lamps fail to illuminate.	*a.* Defective contact or loose wire. contact (9, fig. 3-6). Para 3-10. *b.* Lack of electrical power to reticle projector. *c.* Lamps burned out. *d.* Loose wire connections or defective receptacle assembly.	*a.* Check wire connection or replace *b.* Check electrical input into receptacle assembly (9, fig. 3-11). Para 3-20. *c.* Replace lamps (1, figs. 3-6 and 3-9). *d.* Check connection to receptacle assembly (9, fig. 3-11) or replace. Para 3-14.
Telescope or reticle projector will not hold nitrogen charge.	Dirt preventing valve from closing or faulty valve.	Clean or replace valve stem. Para 3-6.
Filters not fully positioned in optical path when viewed through eyepiece assembly.	*a.* Gear teeth on filter assembly housing broken. *b.* Operating mechanism not adjusted properly.	*a.* Replace filter assembly (10, fig. 3-12). Para 3-17. *b.* Reposition gear (12, fig. 3-12) to mesh with gear at rear of the filter assembly housing. Operate handle to turn filter assembly to extreme position in both directions and adjust stops (set-screws) (1, and 2, fig. 3-13). Para 3-18.
Excessive parallax between target and reticle.	Optical misalinement	Use parallax adjustment screw (5, fig. 3-13) to-correct image. Para 5-4.

Section III. GENERAL MAINTENANCE

2-5. General Maintenance Procedures

Refer to TM 9-254.

2-6. Other Materials Required

The following materials are used to perform repair functions described in this manual.

Item Name	*Specification*	*FSC*
Grease, Aircraft and Instrument Gear and Actuator Screw	MIL-G-23827	9150
Grease, Pneumatic Systems	MIL-G-4343	9150
Sealing Compound (Adhesive Curing)	MIL-S-11031	8003
Sealing Compound (Noncuring)	MIL-S-11030	8030

CHAPTER 3

REPAIR INSTRUCTIONS

Section I. GENERAL

3-1. Scope

This chapter contains detailed instructions, for repair of the telescope at the direct support and general support maintenance levels. Disassembly of the instrument and the extent of repair is limited to replacement of parts authorized to the applicable maintenance levels in TM 9-1240-31134P.

3-2. Parts Replacement

In subsequent paragraphs it is understood that damaged or missing parts are to be replaced. Such repair, if beyond the scope of this manual, shall be cause to evacuate the instrument to a depot maintenance shop.

Section II. REPAIR OF TELESCOPE

3-3. Replacement of Eyeguard (Fig. 3-1)

a. Removal. Remove three setscrews (1). Carefully pull eyeguard (2) from end of the eyepiece assembly.

b. Inspection. Inspect the rubber of the eyeguard for cracks or other signs of deterioration.

c. Repair. Repair is limited to replacement of the eyeguard.

d. Installation. Install in reverse order of disassembly.

3-4. Replacement of Headrest and Repair of Bracket Assembly (Figs. 3-1 and 3-2)

a. Removal (Fig. 3-1).

(1) Remove items 3, 4, and 5.

(2) Carefully work headrest and bracket assembly (6) along the neck of the eyepiece assembly until removed.

b. Disassembly (Fig. 3-2).

(1) Disengage appropriate screw (7) at top of bracket assembly (6) to release headrest (1).

(2) Remove items 2 and 3, and support (4) from headrest (5).

(3) Use screwdriver to remove screw (7).

(4) Pull plungers (8) from both sides of bracket (10) and remove spring (9).

c. Inspection.

(1) Inspect the general condition of the headrest, check for signs of deteriorating rubber.

(2) Inspect hardware and items removed from bracket for rust or corrosion or broken threads. Check spring for compression.

d. Service. Clean the headrest in warm water with a mild soap. Dry thoroughly.

e. Repair. Repair is limited to replacement of missing, defective, or damaged parts.

f. Assembly (Fig. 3-2).

(1) Apply a light film of grease, MIL-;23827, to the cavity of plungers (8) and seat spring (9) into the cavity of one plunger.

(2) Insert plunger and spring through hole in side of bracket (10) and into the horizontal channel. Insert the second plunger through hole on opposite side of bracket until the free end of spring is seated in cavity of the plunger.

(3) Apply sealing compound, MIL-S-11031, to the threads of screw (7). Insert the screws through the elongated holes in top of the bracket and into the threaded holes of the plungers.

(4) Position support (4) on the metal support at rear of headrest (5), install washer (3), secure with screw (2).

g. Installation (Fig. 3-1).

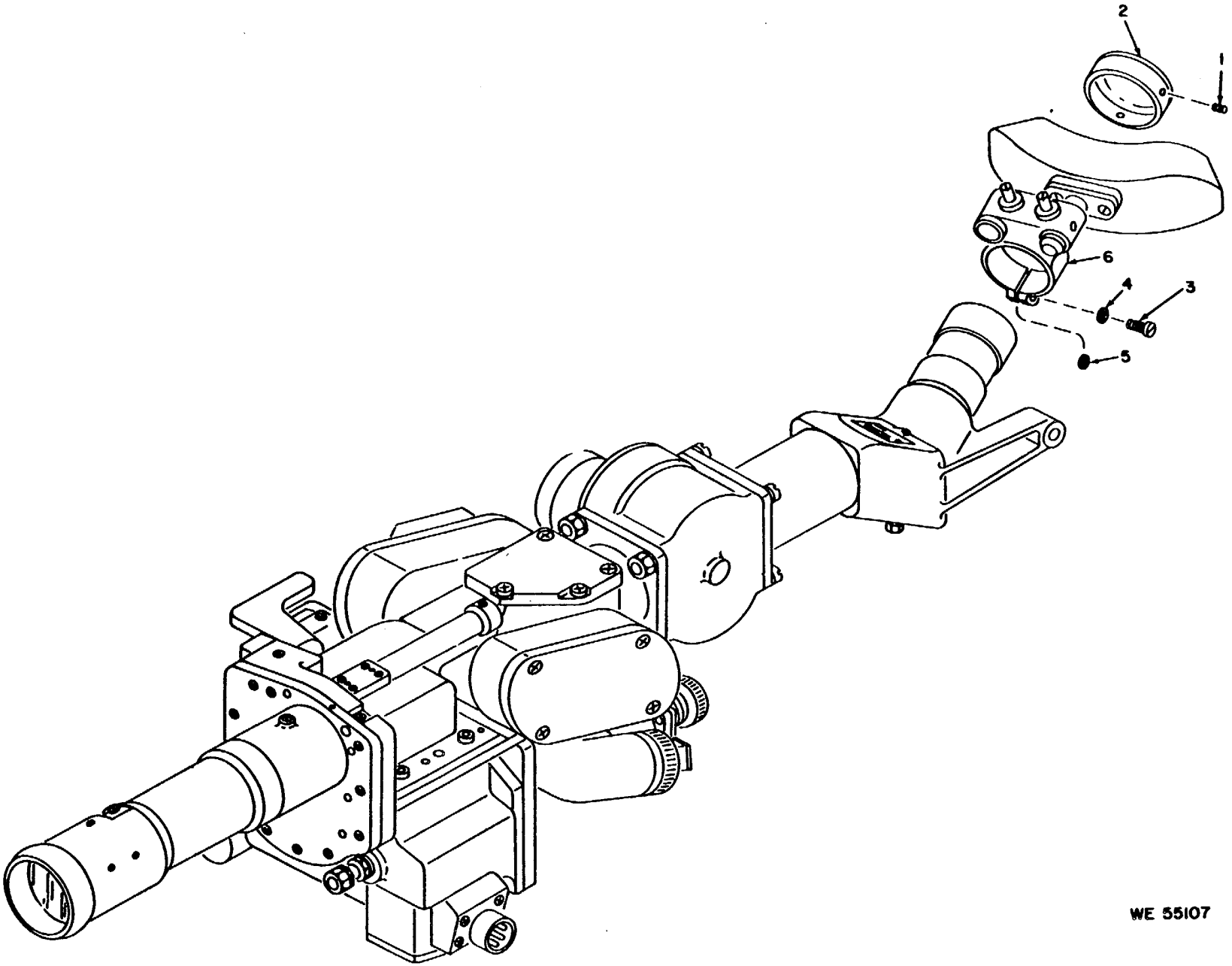

Figure 3-1. Eyeguard, headrest basket assembly-partial exploded view.

1-Setscrew, 6-32 x 1/8 (3) MS51021-21
2-Eyeguard, 10549867
3-Screw, 10-24 x 1/2, MS16995-36
4-Washer, lock, No. 10, MS35333-73
5-Washer, flat 7/32 id, 221432
6-Headrest and bracket assembly

Figure 3-1-Continued.

(1) Guide bracket assembly (6) over the eyeguard and position on neck of the eyepiece assembly. Install items 5 and 4, secure with item 3.

(2) Install headrest (1, fig. 3-2) into either positioning hole in bracket assembly for convenience of the operator.

3-5. Replacement of Eyepiece Assembly(Fig. 3-3)

Note: **Remove headrest and bracket assembly before removing eyepiece assembly. Refer to paragraphs 3-4 a and g.**

a. Removal.

(1) Remove item 1. Unscrew eyepiece assembly (2) and remove from housing.

(2) Reach into housing and remove packing (3).

b. Inspection.

(1) Inspect the eyepiece assembly. Check

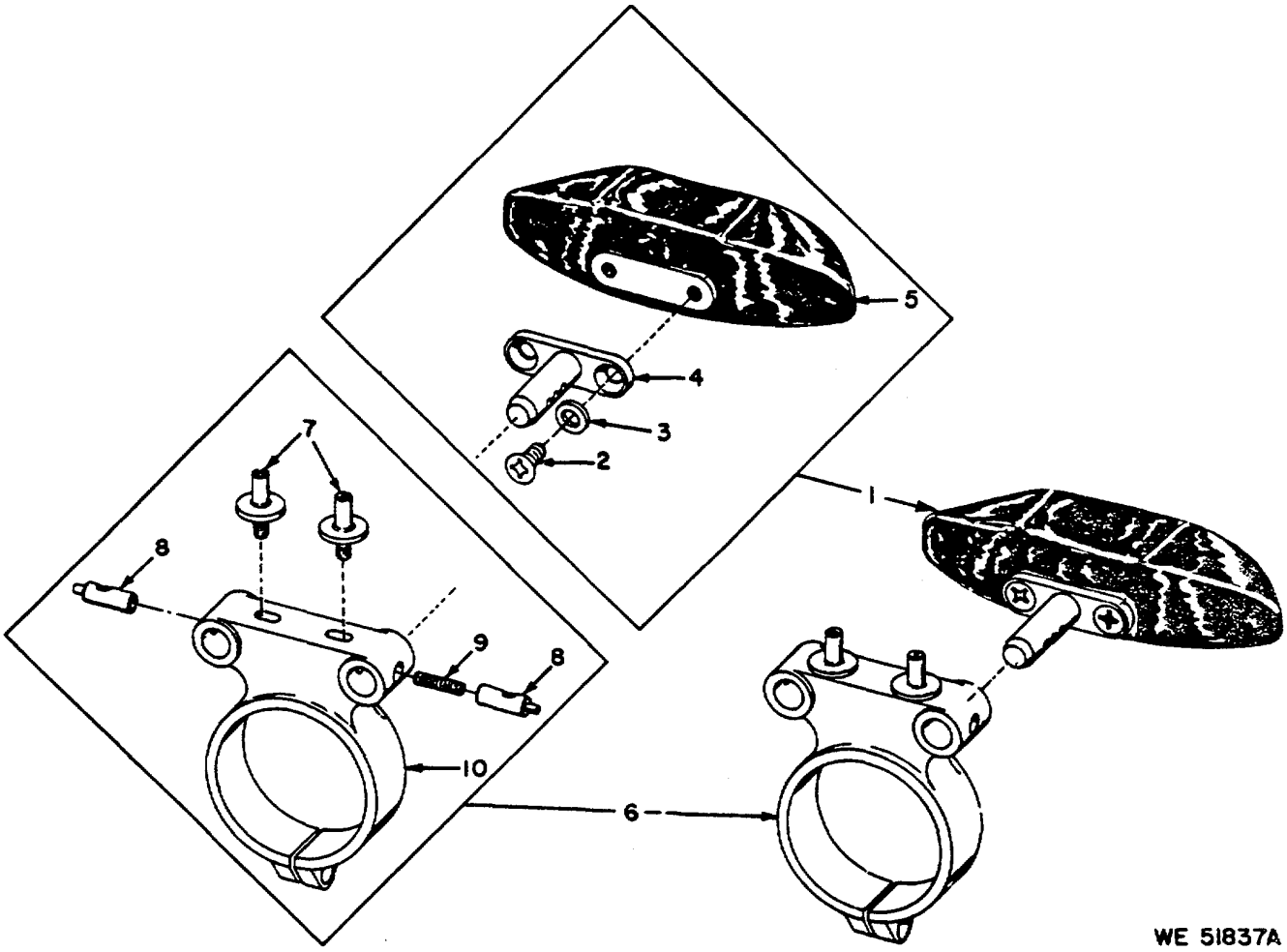

1-Headrest
2-Screw, 1/4-28 x 3/8, (2) MS51958-77
3-Washer, lock 1/4 scr size, (2) MS35338139
4-Support, 11730901
5-Headrest, padded, 10553476
6-Bracket assembly, 8624562
7-Screw, 8-36 x 1-1/8, (2) 8624676
8-Plunger (2), 8624675
9-Spring, compression, 15 coils, 862453677
10-Bracket, 8624535

Figure 3-2. Headrest and bracket assembly exploded view.

for broken optics, worn, or broken threads on outer surface of the cell

(2) Check packing for cracks or other signs of deterioration.

c. Service.

(1) Clean exposed surfaces of optics in the eyepiece assembly with lens tissue paper. Do not disassemble to clean.

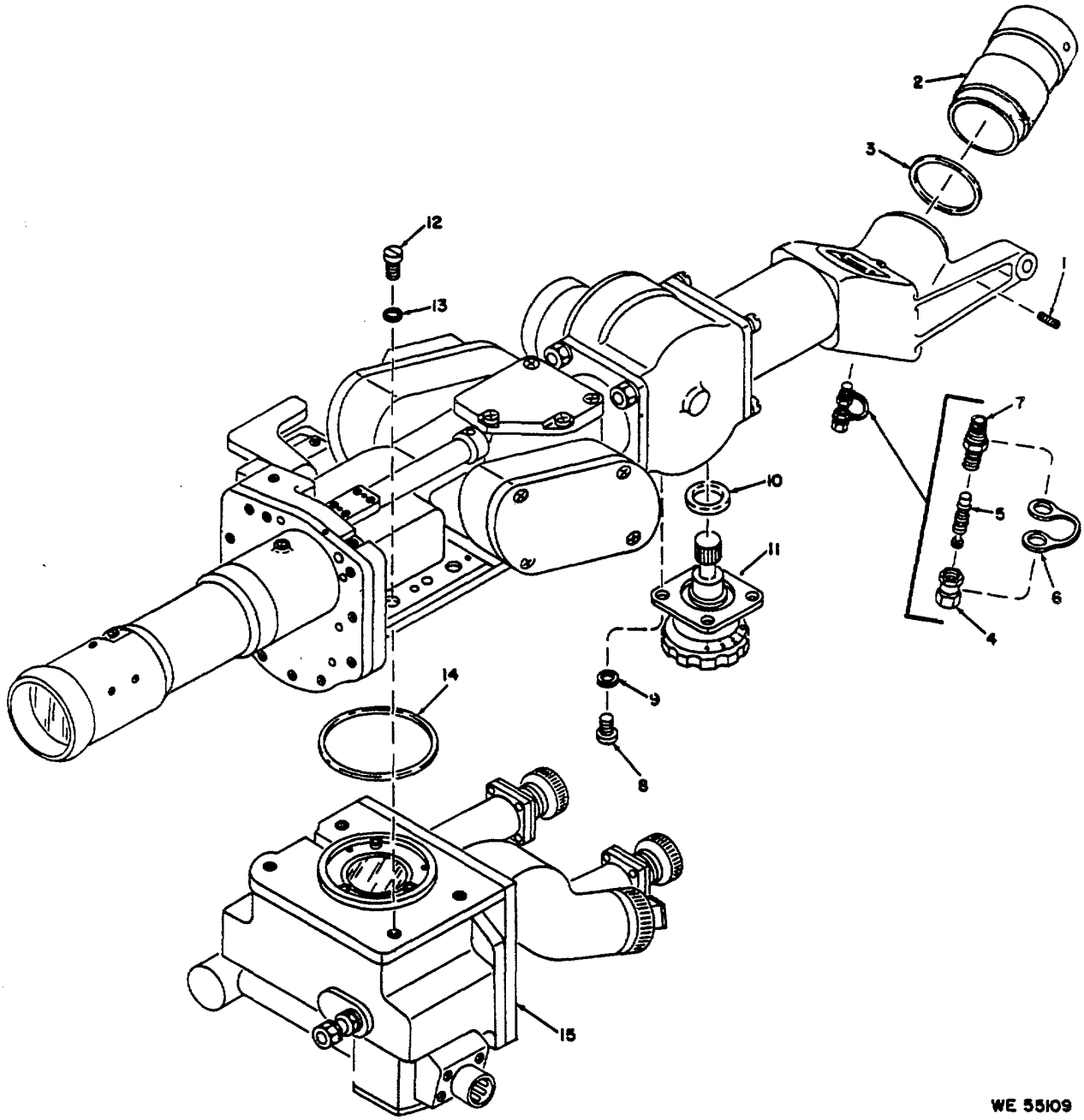

1-Setscrew, 8-32 x 318, MS51021-34
2-Eyepiece assembly, 8624553
3-Packing, 2.612 id, 8624710-3
4-Cap, valve 82000556
5-Valve, air check, MS51877-2
6-Strap, 10516567
7-Valve stem, MS51607-1
8-Screw, 6-32 x 5/16 (4), MS51957-27
9-Washer, lock No. 86 (4), MS35333-71
10-Packing, 0.612 id. 8624710-1
11-Knob assembly, 8624555
12 -Scr, 1/4-20 z 7/8 (4), MS24674-25
13-Washer, lock, 1/4 scr size (4), MS3r5333.-74
14-Packing, 2.48 id, 8624711-2
15-Reticle projector assembly 8624501

Figure 3-3. Eyepiece assembly, diopter knob, and reticle projector--exploded view.

(2) Clean packing in warm water with a mild soap. Dry thoroughly.

d. Repair. Repair is limited to replacement of the eyepiece assembly, packing, or hardware.

e. Installation.

(1) Apply a light film of grease, MILG-4343, to packing (3) and install into groove on inside wall of the housing.

(2) Install eyepiece assembly (2) into the housing. Secure with setscrew (1). Apply sealing compound, MIL-S-11031, over head of setscrew.

3-6. Replacement of Purging and Charging Valve Assemblies (Figs. 3-3 and 3-11)

a. Removal. Remove the valve assembly from telescope eyepiece housing (fig. 3-3) or from the main housing of reticle projector assembly (fig. 3-11).

b. Disassembly. Disassemble items 4, 5, and 6 (fig. 3-3) or items 1, 2, and 3 (fig. 3-11) from respective valve stems (7, fig. 3-3 or 4, fig. 3-11).

c. Inspection. Inspect parts of the Valve assembly for wear, deterioration, and worn or broken threads.

d. Repair. Repair is limited to replacement of any defective or missing part.

e. Assembly. Assemble items in reverse order of disassembly.

f. Installation. Apply sealing compound, MIL-S-11031, to threads of the valve stem and secure in position.

3-7. Repair of Diopter Adjustment Knob Assembly (Figs. 3-3 and 3-4)

a. Removal (Fig. 3-3).

(1) Remove items 8 and 9.

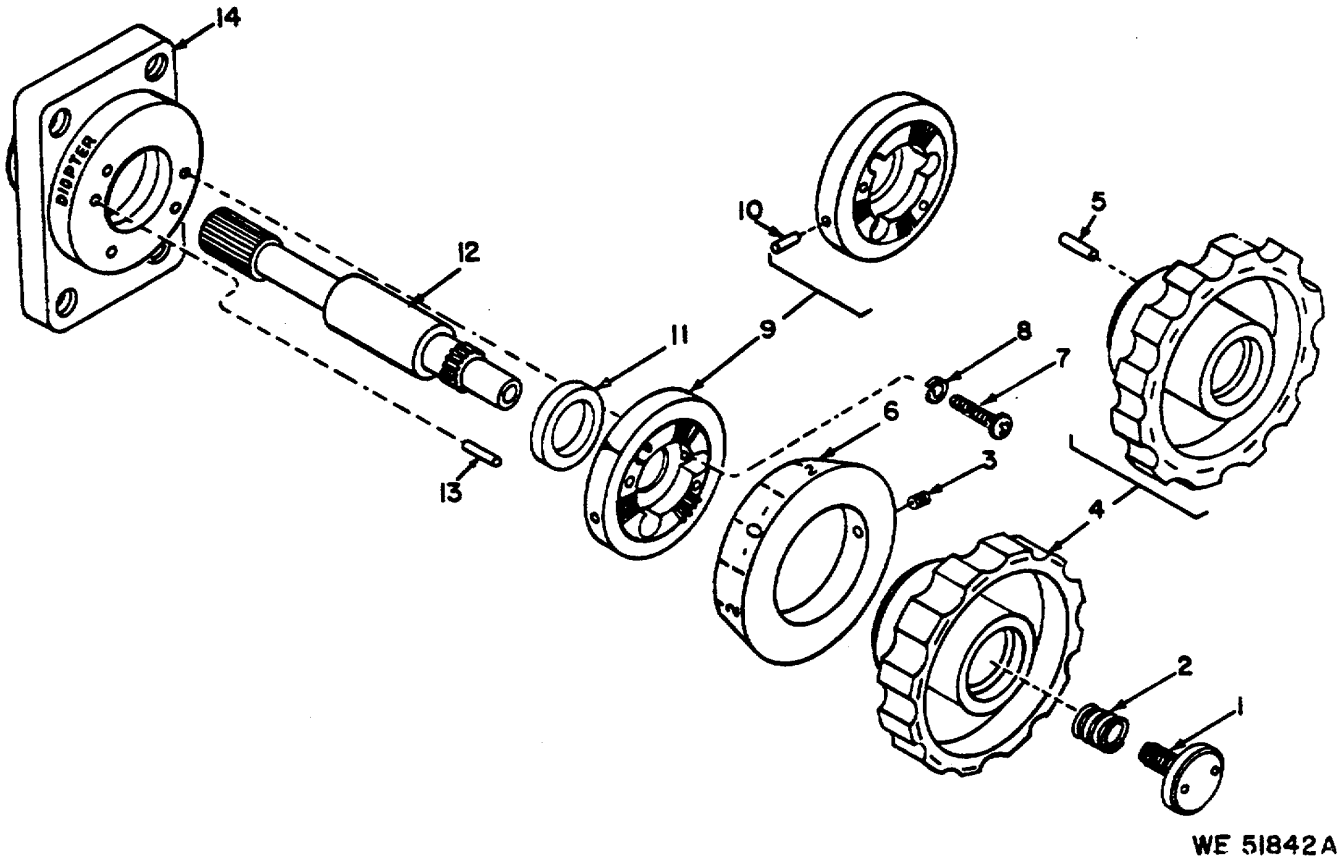

1-Screw, 6-40 x 15/32, 8590832
2-Spring, compression, 5 coil, 8590833
3 -Setscrew, 4-40 x 3/16 (2), MS51021-10
4-Knob, 8624520
5-Pin, 3/32 x 6/16 (2), MS16555-617
6-Dial, 8624531
7-Screw, 2-56 x 5/16 (3), MS61957-4
8-Washer lock, No. 2 (3), MS35338-134
9-Clutch, 8624617-2
10-Pin, 1/16 x 1/4 MS16555-602
11-Packing, 0.424 id, 8619853
12-Adapter, 8624530
13 - Pin, 3/32 x 3/8 (2), MS16555-618
14-Housing, 8624529

Figure 3-4. Diopter knob assembly-exploded view.

(2) Carefully pull knob assembly (11) from housing.

(3) Remove packing (10) from groove of knob assembly housing.

b. Disassembly (Fig. 3-4).

(1) Remove items 1, 2, and 3.

(2) Pull knob (4) and dial (6) from adapter (12).

(3) Remove items 7, 8, 9, 11, and 12 from housing (14). Do not remove pins 5, 10, or 13 unless damaged.

c. Inspection.

(1) Inspect the general condition of all parts. Check for cracks, rust, corrosion or other forms of deterioration.

(2) Inspect hardware for worn or broken threads on screws.

(3) Inspect spring compression.

(4) Inspect the dial, check legibility of numbers and graduations.

(5) Inspect the adapter, check teeth and spline for nicks, burrs, or wear.

(6) Inspect packing, check for wear or deterioration.

d. Service.

(1) Clean metal parts with a cloth moistened with dry cleaning solvent.

(2) Clean parts made of rubber, or other synthetic material, in warm water with a mild soap. Dry thoroughly.

e. Repair. Repair is limited to replacement of defective, damaged, or missing parts.

f. Assembly (Fig. 3-4).

(1) Apply a light film of grease, MIL-G-23827, to the largest diameter surface and to the spur gear of adapter (12). Insert adapter into housing (14).

(2) Apply a light film of grease, MIL-G-4343, to all surfaces of packing (11). Position packing over the adapter and press into the housing cavity.

(3) Position clutch (9) over locator pins (13) and seat firmly on housing. Secure with washer (8) and screw (7).

(4) Position dial (6) with the numeral "0" alined with the indicating line on clutch.

(5) Position knob (4) over dial. Gradually position knob until the two pins (5) are spaced an equal distance from pin (10), extending into the inner diameter of the clutch. Assure that serrations on the clutch and knob and teeth on spur gear and knob mate. Check alinement between dial and clutch. Secure dial with screw (3).

(6) Install spring (2), secure with screw (1).

g. Installation (Fig. 3-3).

(1) Apply a light film of grease; MIL-G-23827, to the splined surface of adapter on knob assembly (11).

(2) Apply a light film of grease, MIL-G-4343, to all surfaces of packing (10) and install into groove of the knob assembly housing.

(3) Use an external power supply and apply 24 VDC to pin "B" of receptacle assembly (9, fig. 3-11), ground on pin "C".

(4) Set objective tube of dioptometer to zero (0) diopters. Sight through dioptometer and adjust for a sharp, clear reticle pattern.

(5) Place dioptometer against eyepiece assembly (2). Insert a wood stick, or other suitable object, through hole in housing where knob assembly was removed and make contact with teeth on side of the cell assembly.

(6) Observe through dioptometer while sliding the cell assembly back and forth until the telescope reticle is at its sharpest point. Remove stick and disconnect electrical source.

(7) Install knob assembly (11) into housing. Ensure the splines on adapter of knob assembly engage teeth on side of the cell assembly.
Secure with washer (9) and screw (8).

(8) Check diopter movement of knob assembly. A minimum reading of +4.00 to -4.00 diopters is required. If not obtained, remove and disassemble the knob assembly using procedures in paragraphs b(1) and (2) above. Assemble using procedures in paragraphs f(4) through (6) above.

3-8. Replacement of Reticle Projector Assembly Packing (Fig. 3-3)

a. Removal.

(1) Remove items 12 and 13.

(2) Carefully pry the reticle assembly (15) from the filter housing.

(3) Remove packing (14) from reticle assembly housing.

b. Inspection. Inspect packing, check for wear or deterioration.

c. Cleaning. Clean packing in warm water with a mild soap. Dry thoroughly.

d. Installation.

(1) Apply a thin film of grease, MIL-G-4343, to all surfaces of packing (14).

(2) Install packing into groove of the reticle assembly housing.

(3) Position reticle assembly (15) under the filter housing, secure with washer (13) and screw (12).

3-9. Replacement of Deflection and Elevation Boresight Housing Packing (Fig. 3-5)

a. Disassembly.

(1) Remove items 1 and 2.

(2) Carefully separate control housing assembly (3) from the main housing.

(3) Peel packing (4) from groove of the control housing. Do not remove locating pins (5) unless damaged.

b. Inspection. Inspect the packing, check for wear or deterioration.

c. Cleaning. Clean packing in warm water with a mild soap. Dry thoroughly.

d. Repair. Repair is limited to replacement of the packing and hardware.

e. Installation.

(1) Apply a thin film of grease, MIL-G-4343, to all surfaces of packing (4).

(2) Install packing into groove of control housing assembly (3).

(3) Position locating pins on the control housing assembly over locator holes in the main housing, push in until surfaces mate. Position washer (2), and secure with screw (1).

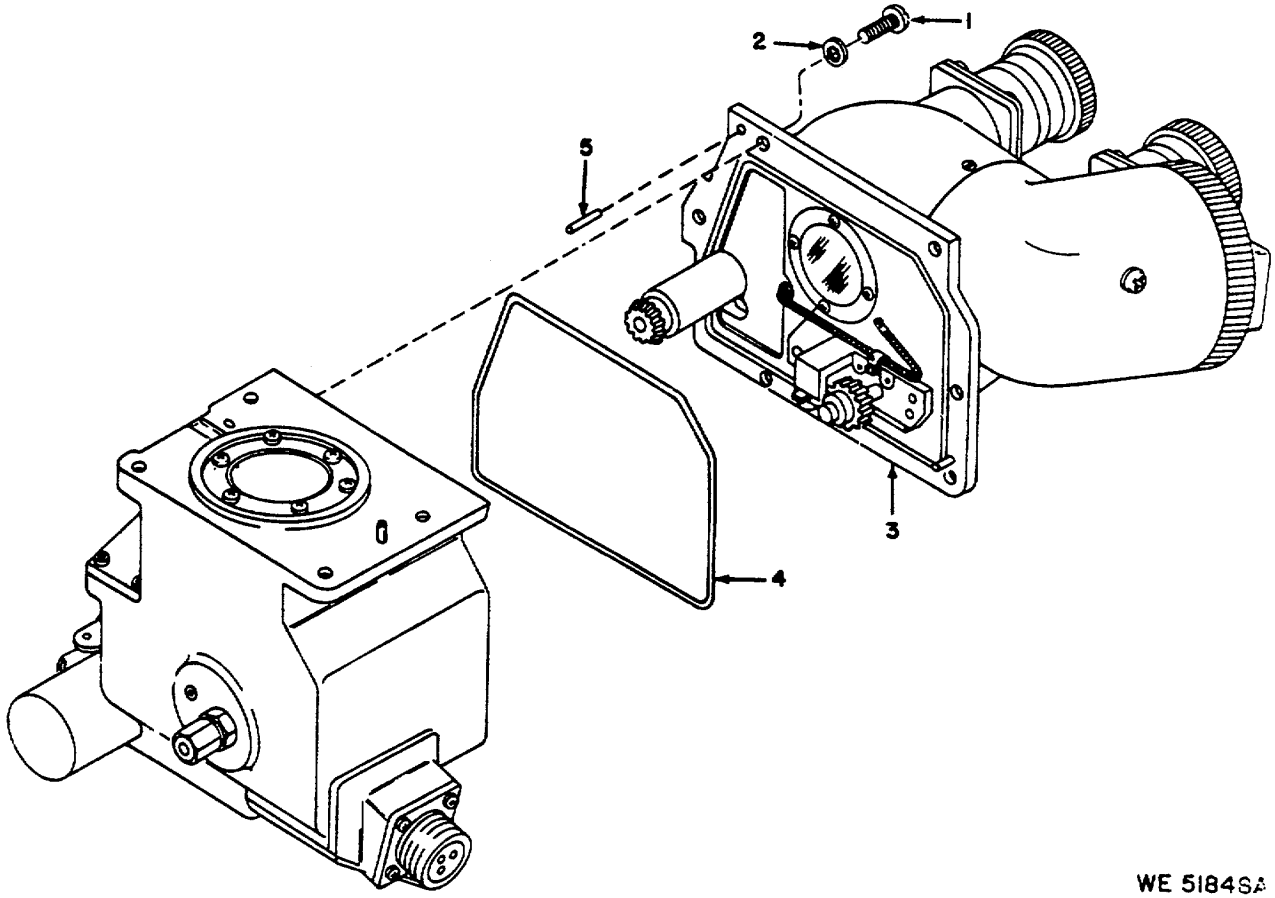

1 - Screw, 8-32 x 1/2, (6), MS5197-45
2 - Washer, lock No. 8, (6), MS35333-72
3 - Housing assembly, control, 8624502
4 - Packing, 3.875 id, 8624710-5
5 - Pin, 1/8 x 5/8, (2), MS16555-27

Figure 3-5. Conventional boresight control housing assembly-partial exploded view.

3-10. Replacement of Reticle Lamps and Ground Strap (Figs. 3-6 and 3-9)

a. Disassembly.

(1) Twist to remove lampholder assembly (3. fig. 3-6) with lamp attached. Push in and twist to remove lamp (1).

(2) Unlock and open cover (fig. 3-9). Push in and twist lamp (1) to remove from lamp assembly.

(3) Detach hardware, items(2, 4 and 5, fig. 3-6), and remove strap (6).

(4) Remove screw (7, fig. 3-6), and washer (8). Pull contact assembly (9) out as far as possible from the support.

(5) Unsolder wire from contact and remove the assembly.

(6) Remove setscrew (10, fig. 3-6) and pull support (14) from housing.

(7) Remove screws (11, fig. 3-6 or 2, fig. 3-9) securing plate with mirror attached to support. Lift plate to remove.

(8) Press mirror (13, fig. 3-6 or 4, fig. 3-9) from plate (12, fig. 3-6 or 3, fig. 3-9).

b. Inspection.

(1) Inspect lampholder assembly (3, fig. 3-6) or lamp assembly (fig. 3-9), check for rust or corrosion.

(2) Inspect ground strap; check for rust or corrosion. Check soldered connections of terminals.

(3) Inspect contact assembly; check for rust or corrosion.

(4) Inspect the mirror, if mirror is glass check if broken, cracked, or chipped. If mirror is metal, clean reflecting surface.

(5) Inspect plate and hardware; check for rust, worn, burred, or broken threads.

c. Repair. Repair is limited to replacement of all items inspected in b above.

d. Assembly..

(1) Apply sealing compound, MIL-S-11031, to the inner flange of plate (12, fig. 3-6 or 3, fig. 3-9).

(2) Press mirror (13, fig. 3-6 or 4, fig. 3-9) into the plate opening with polished surface facing up. Wipe off excess sealing compound.

(3) Position plate, with mirror installed, on the respective support. Apply sealing compound, MIL-S-11031, to threads of screws (11, fig. 3-6 or 2, fig. 3-9) and secure the plate.

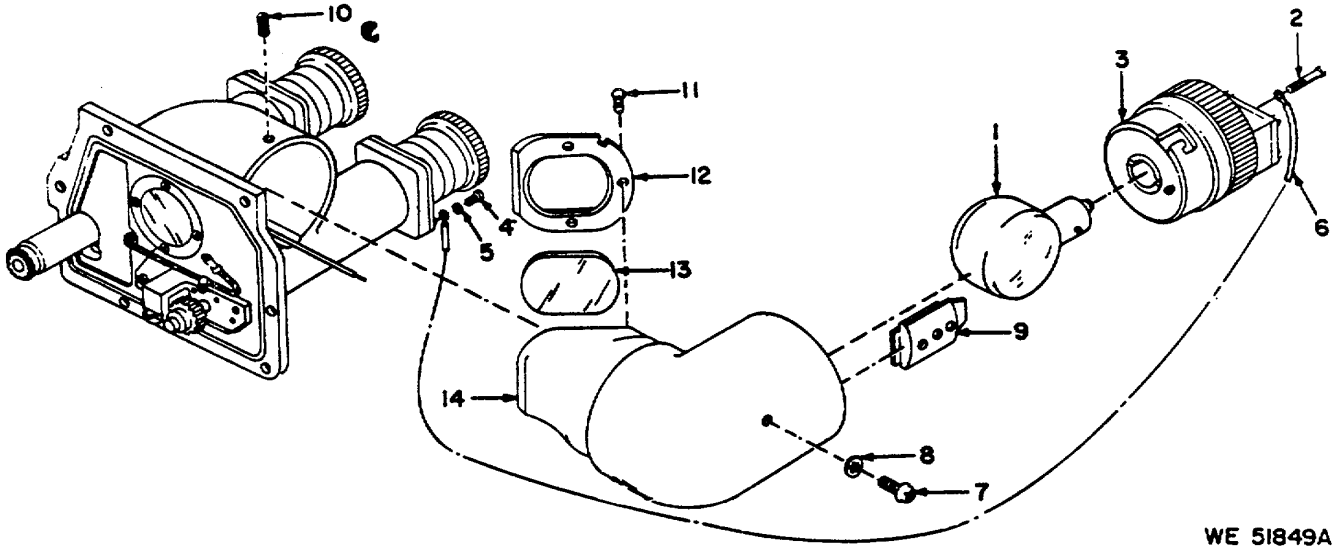

1- Lamp, sgl cont, 28V, 8624583
2- Screw, 4-40 x 5/8, MS51957-18
3- Lampholder assembly, 10549783
4- Screw, 6 32 x 3/8, MS51957-28
5- Washer, lock No. 6, MS35333-71
6 - Strap, ground, 10549759
7 - Screw, 4-40 x 1/4, MS51957-13
8 - Washer, lock, No. 4, MS35333-70
9 - Contact assembly, 10549780
10 - Setscrew, 6-32 x 3/16, (2), MS51029-17
11 - Screw, 2-56 1/4, (S), MS51959-3
12 - Plate, 8624587
13 - Mirror, 11727579
14 - Support, 8624527

Figure 3-6. Conventional reticle lampholder assembly-partial exploded view.

(4) Thread wire protruding from housing through side of support (14, fig. 3-6). Install support in housing and apply sealing compound, MIL-S-11031, to threads of setscrew (10); secure to housing.

(5) Solder wire to contact (9, fig. 3-6). Position contact on side of support and secure with items 8 and 7.

(6) Position ground strap (6, fig. 3-6) between housing and lampholder assembly (3), install items 5 and 4. Apply sealing compound, MIL-S-11031, to screw (2) and secure the strap.

(7) Install lamp (1) in either the lampholder assembly (3, fig. 3-6) or lamp assembly (fig. 3-9).

3-11. Repair of Deflection or Elevation Boresight Control Assembly and Replace ment of Housing Window (Fig. 3-7)

a. Disassembly.

(1) Unscrew item 1 to remove item 2 and pointer (3) from either knob assembly.

(2) Remove items 4 through 8 and pull knob (9) from spline of adapter.

(3) Remove spacer (10) and stop (11).

(4) Remove items 12 and 13, and pry clutch (14) from locating pins.

(5) Remove packing (15) from cavity of adapter housing.

(6) Unscrew item 16. Remove plate (17) and window (18) from housing.

Note: Screw (19) is removed only to purge the reticle projector assembly.

b. Inspection.

(1) Inspection the general condition of all parts. Check for rust or corrosion.

(2) Inspect dial, check legibility of letters, numbers, and graduations.

(3) Inspect spring for compression.

(4) Inspect packing, check for wear or deterioration of rubber.

(5) Inspect hardware, check for burred or stripped threads.

c. Cleaning.

(1) Clean all metal parts with a cloth moistened with dry cleaning fluid.

(2) Clean the rubber packing in warm water with a mild soap. Dry thoroughly.

d. Repair. Repair is limited to replacement of the of the pointer, clutch, packing window and hardware.

e. Assembly.

(1) Position window (18) in insert of the housing.

(2) Apply sealing compound, MIL-S-11031, to threads of screws (16). Position plate (17) over window and secure to housing with screws.

(3) Apply a thin film of grease, MIL-G-4343 to packing (15) and install into cavity of the adapter housing.

(4) Apply a thin film of grease, MIL-G-23827, to the splined surface of the adapter.

(5) Position clutch (14) over locating pins, install washers (13) and secure with screws (12)

(6) Install stop (11) and spacer (10).

(7) Position knob (9) over adapter. Push in until serrations on clutch, knob, and spline mate.

(8) Install spring (8) into center hole of the knob, secure with screw (7)

(9) Position dial (6) on flange of the knob, install washer (5) and secure with nut (4)

(10) Install pointer (3) in vertical position using the inside holes of both knob assemblies Position washer (2), secure with screw (1)

3-12. Repair of Horizontal or Vertical Boresight Control Assembly (Fig. 3-8)

a. Removal. Remove items 1 and 2. Pull dial (4) from housing opening and remove packing (3) from inset of housing.

b. Disassembly

(1) Remove items 5 and 6. Pull knob (7) from end of adapter (9).

(2) Disassemble items 8 through 11 and pry plate (12) from locating pin (13). Do not remove pin.

(3) Disassemble items 14 and 15. Remove packing (16).

c. Inspection.

(1) Inspect the general condition of all parts. Check for rust or corrosion.

(2) Inspect the spring for compression.

(3) Inspect the packing, check for wear and deterioration of rubber.

(4) Inspect hardware, check for burred or stripped threads.

d. Cleaning.

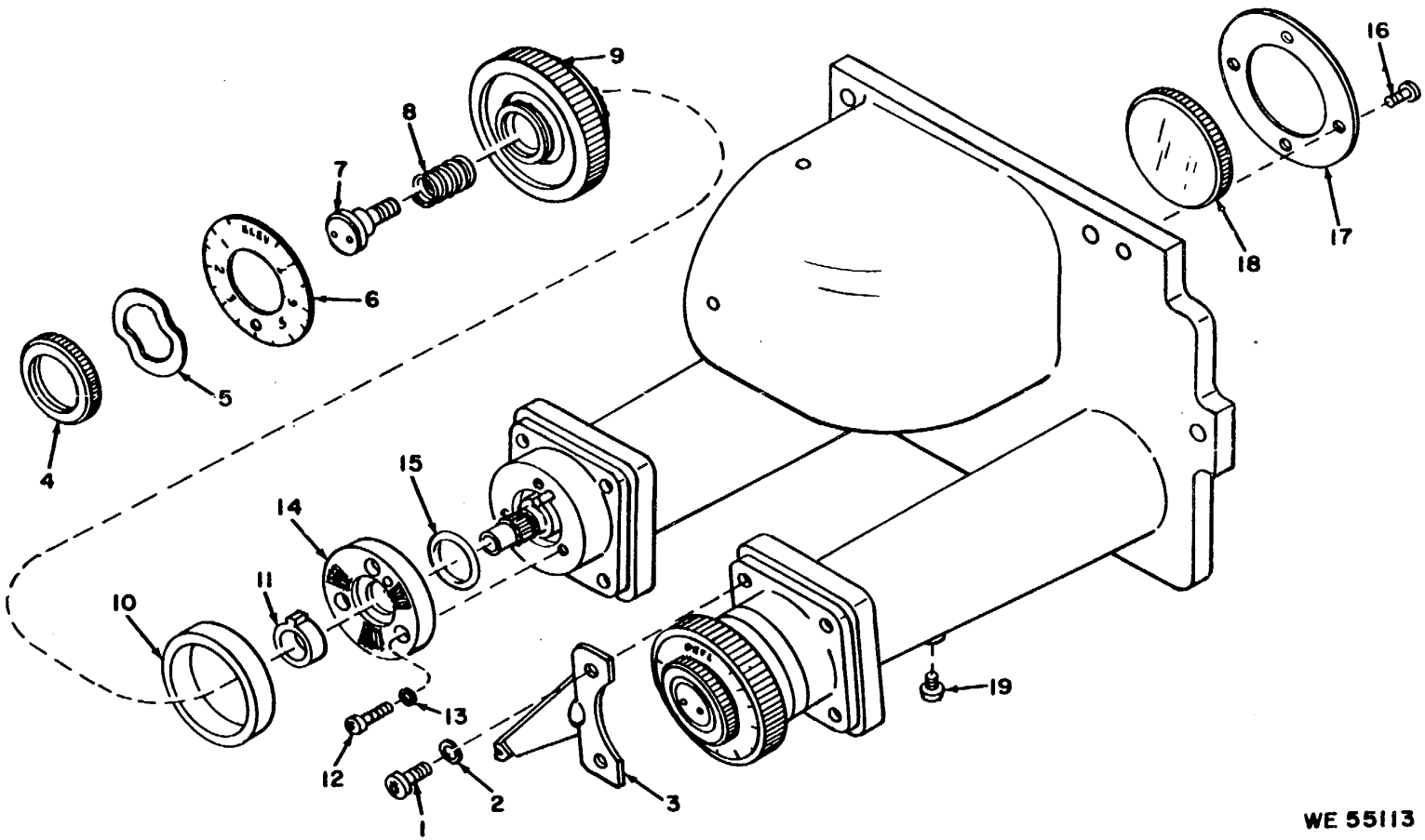

Figure 3-7. Deflection and elevation boresight housing assembly—partial exploded view.

1 - Screw. 6-32 x 3/8, (8), MS51957-28
2-Washer. lock. No. 6, (8), MS35333-71
3 - Pointer, (2). 8624618
4 - Nut. 11/16-32. (2) 8624702.
5 - Washer. spring, 0.690(id, (2), 8624709
6 - Dial boresight elevation. 8624572-1
Dial, boresight deflection 8624572-2
7 - Screw, 6-40 x 3 /, (2), 8590832
8 - Spring. compression, 5 coils, (2), 8590833
9 - Knob, (2) 8624524
10 - Spacer. 0.937 id. (2), 8624704
11 - Stop, (2). 8624714
12 - Screw. 2-56 x 1/4, (6), MS51957-3
13 - Washer. lock. No. 2, (6), MS35338-n-134
14 - Clutch, (2), 8624617-1
15 - Packing. 0.424 id. (2). 86195853
16 - Screw, 2-56 x 1/4 (4,, MS51959
17 - Plate. 1.0 id. 8624645
18 - Window. 8624642
19 - Screw, 4-40 x 5/32, 862649

Figure 3-7-Continued.

(1) Clean all metal parts with a cloth moistened with dry cleaning fluid.

(2) Clean rubber packing in warm water with a mild soap. Dry thoroughly.

e. Repair. Repair is limited to replacement of the packing, spring, and hardware.

f. Assembly.

(1) Apply a thin film of grease, MIL-G-4343 to packing (16) and insert into the groove of adapter (17).

(2) Apply a thin film of grease, MIL-G-23827, to the inner and outer surfaces of adapter (17) and install setscrew (15) into the adapter.
Screw in until the tip protrudes 3/16-inch on the vertical dial, or 3/4-inch on the horizontal dial.

(3) Install retainer (14) over setscrew and check length of screw tip. (See (2) above).

(4) Install plate (12) over locating pin protruding from bottom of the retainer.

(5) Install items 11, 10, 9, and 8 on the adapter.

(6) Apply a thin film of grease, MIL-G-23827, to the entire surface of adapter (9). Position knob (7) over adapter. Push in until serrations on plate and knob mate.

(7) Install spring (6) into cavity of the knob and secure with screw (5).

g. Installation.

(1) Apply a thin film of grease, MIL-G-4343, to packing (3) and insert into groove of housing on dial (4).

(2) Insert dial (4) through opening in housing. Ensure that screw tip, (see para f(2)) is in contact with the reticle assembly.

(3) Position washer (2), secure with screw (1).

3-13. Replacement of Reticle Missile Lamp Assembly (Fig. 3-8)

a. Removal.

(1) Unscrew item 18. Remove washer (19) and plate (20).

(2) Reach into housing opening and unsolder wire lead from receptacle assembly.

(3) Remove setscrew (21). Carefully pull lamp assembly (22) from housing.

b. Installation.

(1) Position lamp assembly (22) into housing. Ensure wire lead is free of obstacles and solder to receptacle assembly.

(2) Install remaining parts in reverse order of removal. Apply sealing compound, MIL-S-11031, to threads of setscrew (21).

3-14. Replacement of Receptacle Assembly (Fig. 3-11)

a. Removal.

(1) Remove screw (18, fig. 3-8), washer (19), and cover (20) from housing.

(2) Reach into housing opening and unsolder wire lead from pins "A" and "B" of receptacle assembly (9, fig. 3-11).

(3) Reach into housing and release receptacle ground wire by removing items 5 and 6.

(4) Remove items 7 and 8. Pull receptacle assembly (9) from housing.

b. Inspection.

(1) Inspect hardware, check for worn, broken, or burred threads, rust or corrosion.

(2) Inspect receptacle, check for broken or cracked insulation, rust or corrosion. Check wire for frayed, worn, or cracked insulation. Check soldered connections between receptacle and terminal.

c. Repair Repair is limited to replacement of the receptacle assembly. Wire attached to terminal "C" is supplied with receptacle.

d. Installation.

(1) Install receptacle assembly (9) into

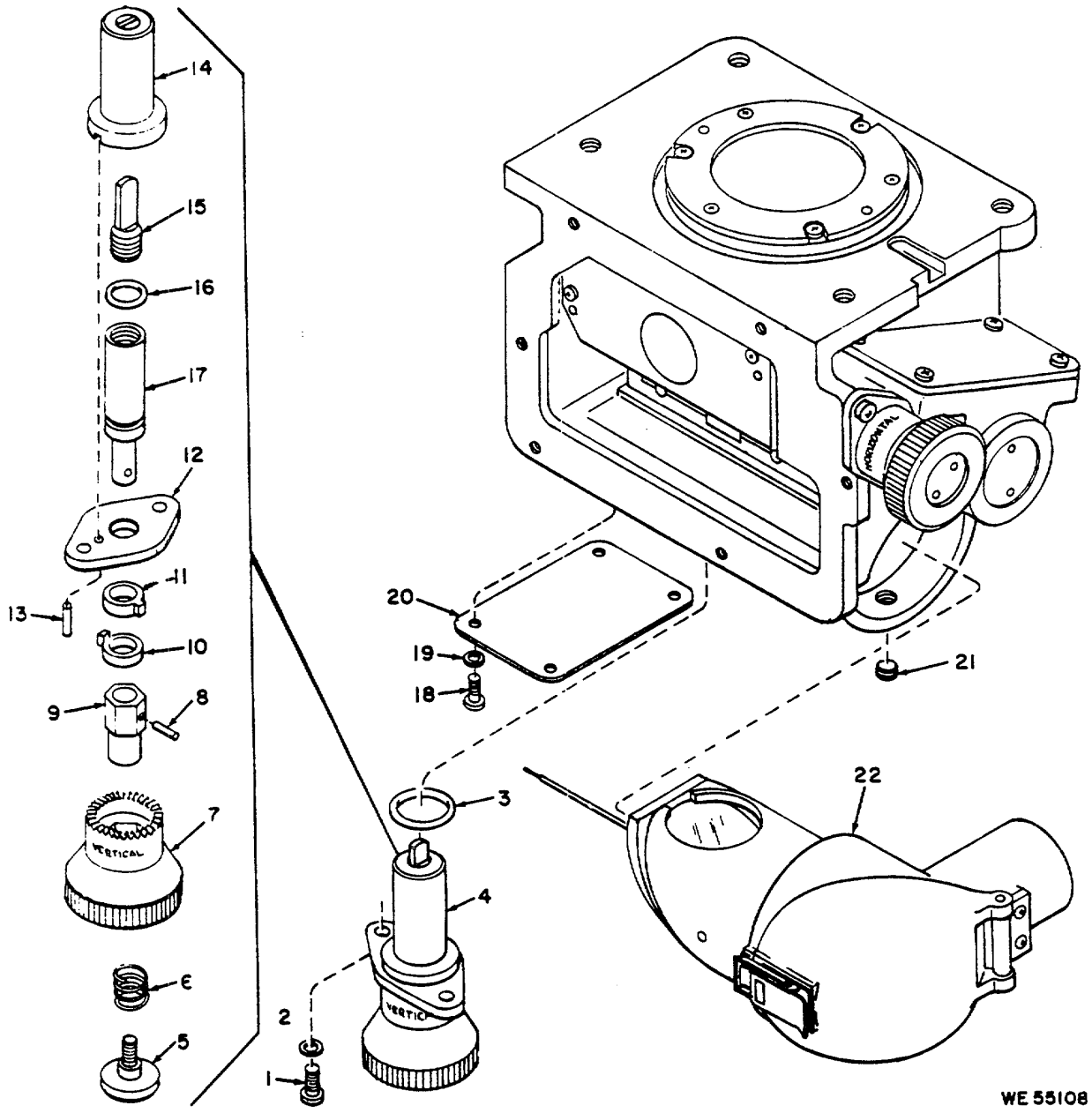

1 - Screw, 4-40 x 1/4, (2) MS51957-13
2 - Washer, lock, No. 4, (2), MS35333-70
3 - Packing, 0.489 id, 8624710-6
4 - Dial, boresight vertical, 8624567-1
Dial, boresight horizontal, 8624567-2
5 - Screw, 6-40 x 3/8, 8590832
6 - Spring, compression, 5 coils, 8590833
7 - Knob, vertical, 8624603-1
Knob, horizontal, 8624603-2
8 - Pin, 1/16 x 5/16, MS16555-603
9 - Adapter, 6-40 x 0.687, 8624682
10 -- Washer, key, 0.188 id. 8624602
11 -- Washer, key, 0.188 id, 8624601
12 -- Plate, serrated, 8624568
13 -- Pin, 3/32 x 5/16, MS16555-617
14 -- Retainer, 8624599
15 -- Setscrew, 5/16-14 x 7/8, (vertical), 8624681-1
Setscrew, 5/16-14 x 1-7/16 horizontal), 8624681-2
16 - Packing, 0.239 id, 8624711-1
17 - Adapter, 8624600
18 - Screw, 4-40 x 1/4, (4), MS51957-13
19 -- Washer. lock, No. 4, (4), MS35333-70
20 - Cover, 8624639
21 - Setscrew, 4-40 x 1/4, MS51029-60
22 - Lamp assembly, 8624519

Figure 3-8. Horizontal or vertical boresight control dial and reticle missile lamp assembly-partial exploded view.

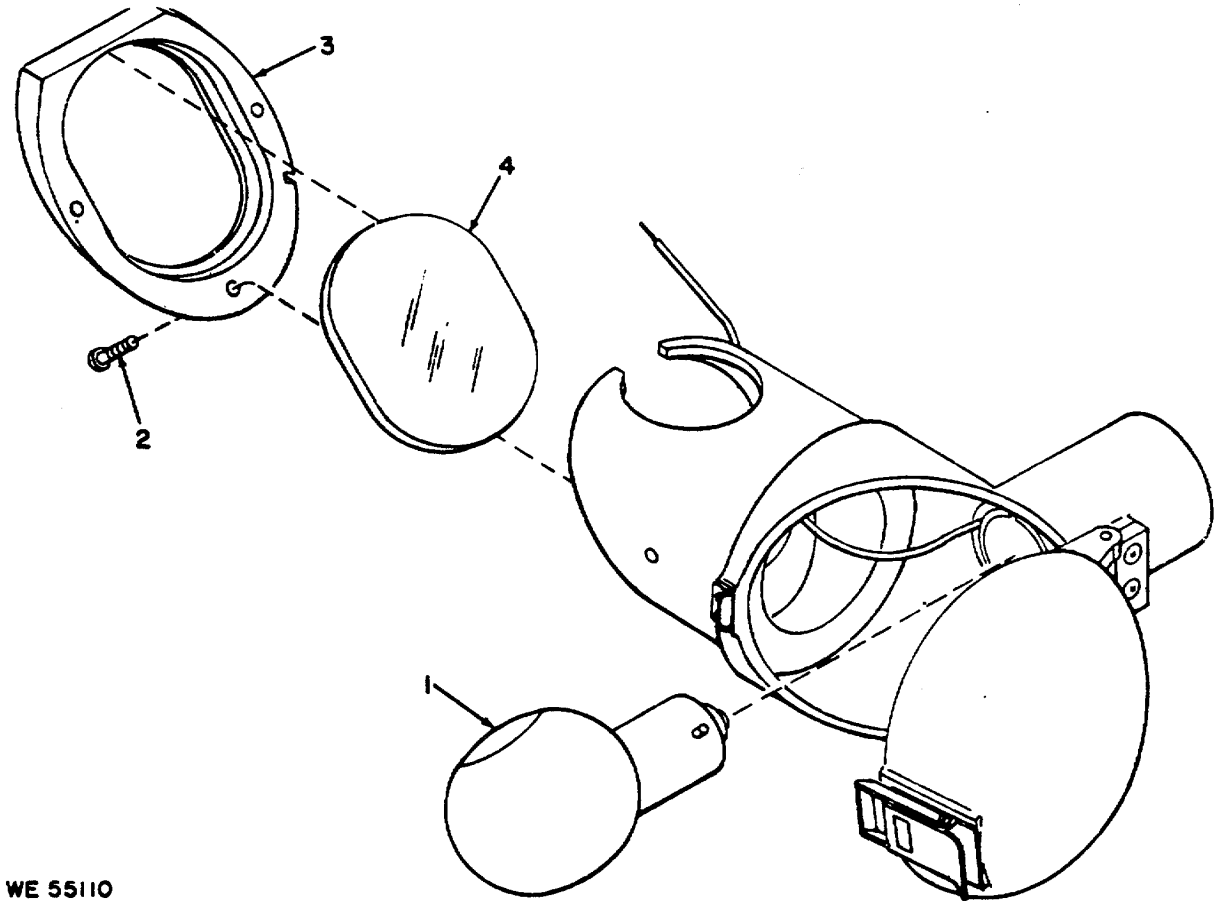

1 - Lamp, sgl cont, 28V, 8624583

2 -- Screw, 2-56 x 1/4, (3), MS51959-3

3-- Plate, 8624587
4-- Mirror, 11727579

Figure 3-9. Reticle missile lamp assembly-partial exploded view.

housing opening. Position washer (8) secure with screw (7).

(2) Position and solder wires to the receptacle assembly in accordance with wiring diagram (fig. 3-10).

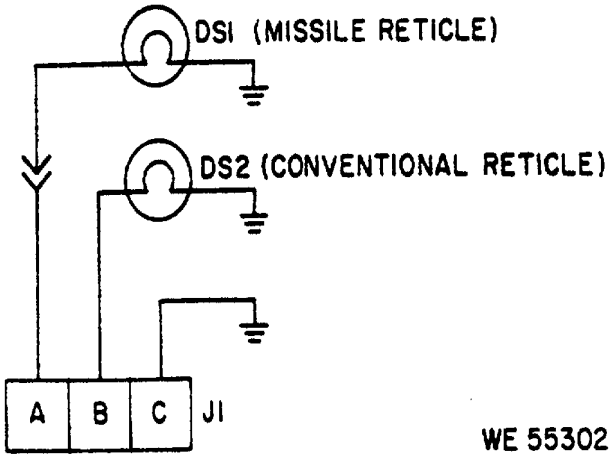

Figure 3-10. Receptacle assembly wiring diagram

(3) Install remaining parts in reverse order of removal.

3-15. Removal of Objective Tube Assembly Fig. 3-12)

a. Disassembly. Remove items 2 and 3. Pry tube assembly (4) from locating pin and lift from housing.

b. Assembly.

(1) Position tube assembly (4) over locating pin on filter housing, secure with items 3 and 2.

(2) Remove eight screws (1), seven around face of tube assembly and one on top surface.

(3) Using adapter, attached to sealing gun. inject sealing compound, MIL-S-11030, into the eight holes to affect a perfect seal between tube and housing.

(4) Install screws.

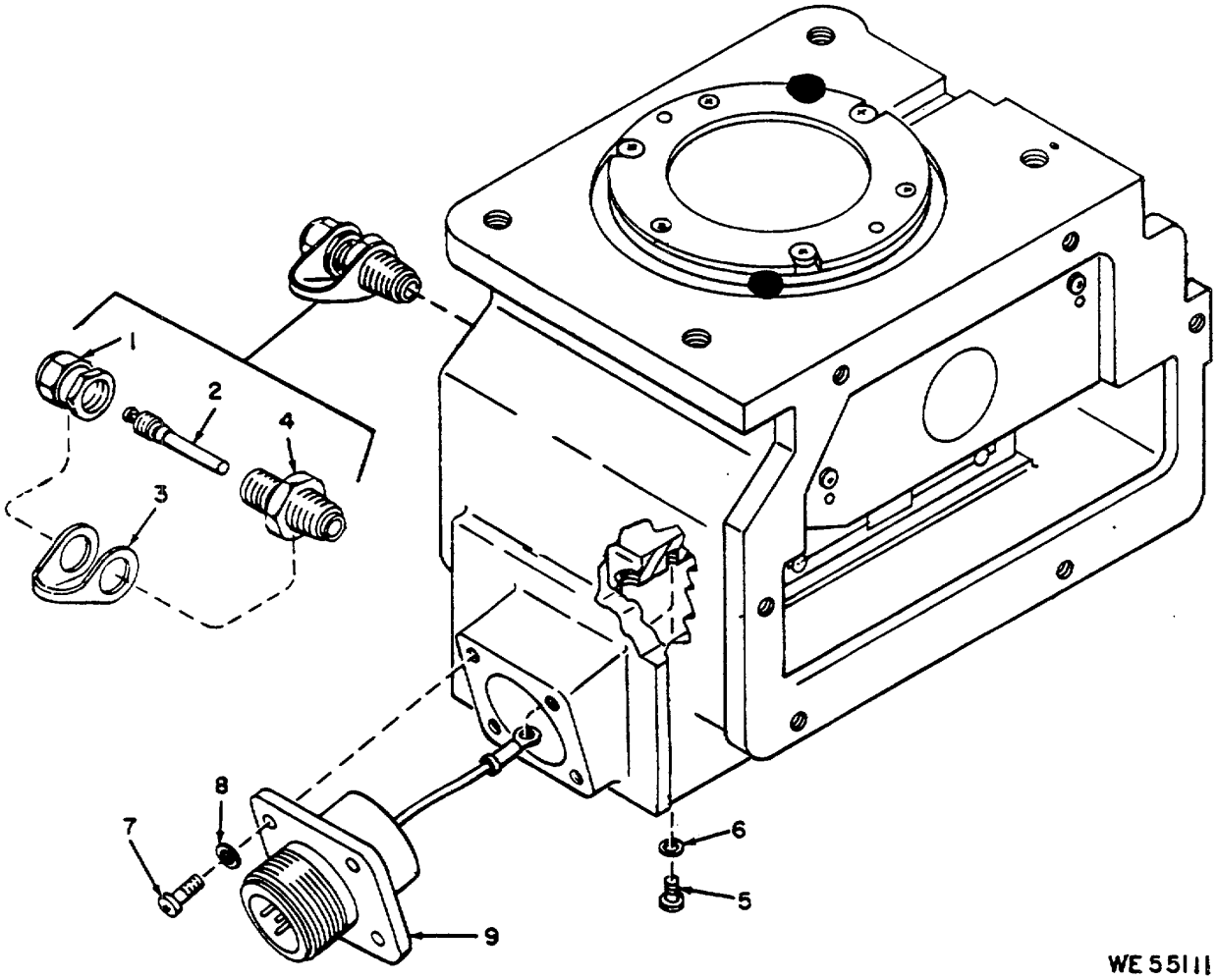

1 ---Cap, valve, 8200055
2 - Air check valve. MS51377-2
3 - Strap, 10516567
4 - Valve stem, MS51607-1
5 - Screw, 4-40 x 3/16, MS35212-11
6 - Washer, lock, No. 4, MS35333-87
7 - Screw, 4-40 x 5/16 (4), MS651957-14
8 - Washer. lock. No. 4 (4), MS35333-70
9 - Receptacle assembly, 8624721

Figure 3-11. Reticle projector charging valve and receptacle assembly--partial exploded view.

3-16. Replacement of Filter Assembly Positioning Plunger and Spring (Fig. 3-12)

a. Disassembly.

(1) Refer to paragraph 3-15 to remove and replace the objective tube assembly.

(2) Remove item 5.

(3) Use adjustable spanner wrench to remove item 6.

(4) Remove spring (7) and plunger (8).

b. Inspection.

(1) Inspect screws for broken or worn threads, rust or corrosion.

(2) Inspect spring, check for compression.

(3) Inspect plunger assembly, check bearing for free rotation, rust or corrosion.

c. Cleaning. Clean all parts with a cloth moistened with dry cleaning solvent.

d. Repair. Repair is limited to replacement of the screws and spring.

e. Assembly.

(1) Apply a thin film of grease, MIL-G-23827, to the bearing of plunger assembly (8). Insert spring (7) into hole of the plunger assembly and install items into housing.

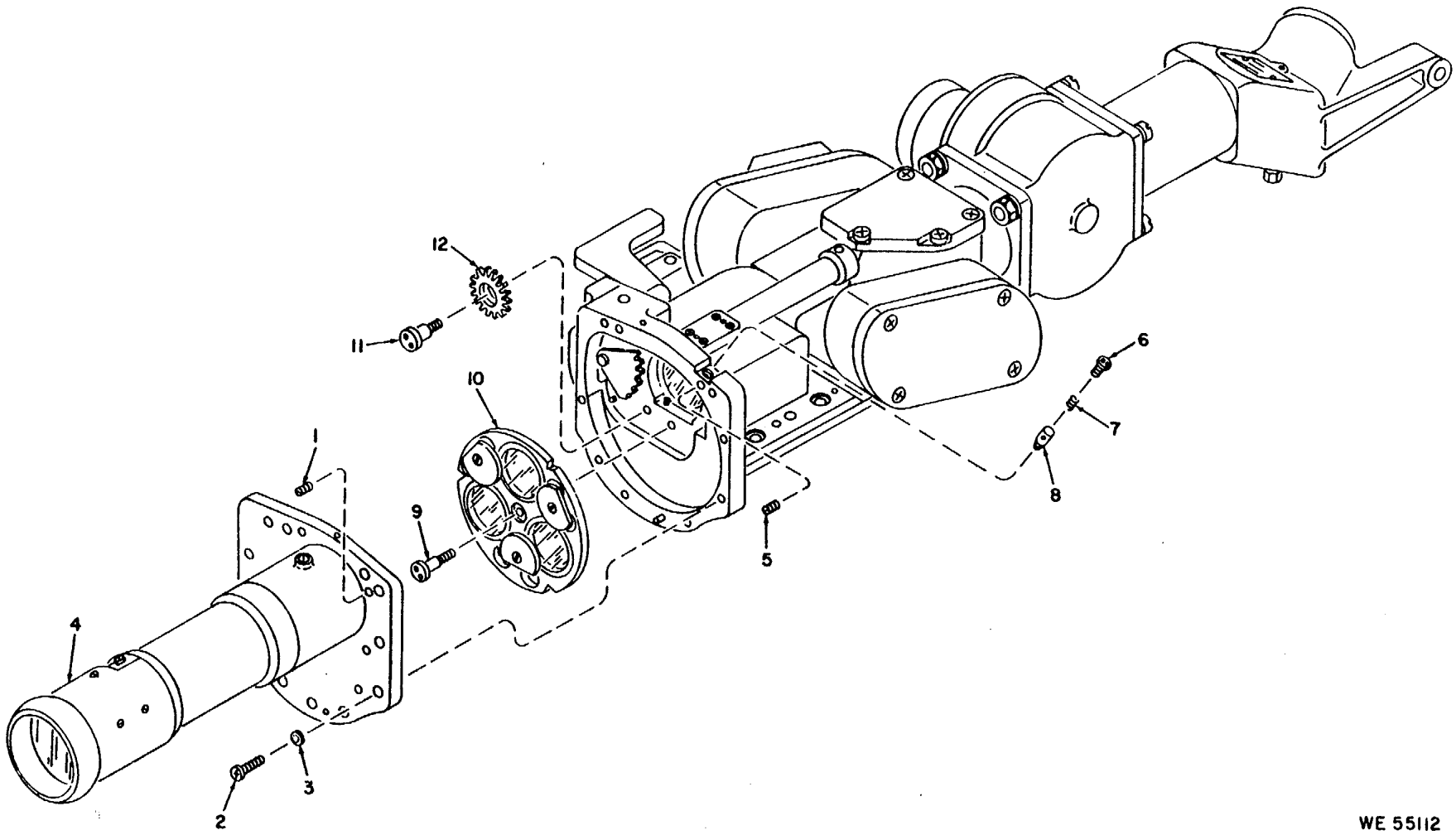

1 - Setscrew, 9-32 x 1/3, (8), MS51965-27
2 - Screw, 6-32 x 3/8, (10) MS51957-28
3 - Washer, lock, No. 6, (10), MS35333-71
4 - Objective tube assembly, 8624516
5 - Setscrew, 6-2 x 1/8, MS51021-21
6 - Screw, 5/16-18 x 0.18, P624629
7 - Spring, compression, 10 coils, 8624625
8 - Plunger assembly, 8624561
9 - Stud, 8-32 x 0.95, 8624623
10 -- Filter assembly, 8624551
11 -- Stud, 8624624
12 -- Gear, 72 T, 8624578

Figure 3-12. Objective tube assembly, filter assembly and filter assembly operation mechanism—partial exploded view.

(2) Apply sealing compound, MIL-S-11031, to the threads of screw (6) anti install. Tighten screw until the plunger bearing seats into the groove on side of filter assembly (10) housing. Use the lever to rotate the filter assembly. The plunger should permit rotation but hold the filter assembly in each position. Tighten or loosen screw as required.

(3) Install setscrew (5) and apply sealing compound, MIL-S-11031. over head of the setscrew.

3-17. Replacement of Filter Assembly (Fig. 3-12).

a. Removal.

(1) Refer to paragraph 3-15 for removal and replacement of the objective tube assembly (4).

(2) Use adjustable spanner wrench to remove stud (9). Carefully pull filter assembly (10) from housing.

b. Inspection.

(1) Inspect the filter assembly, check for cracked or broken filters.

(2) Inspect the stud, check for worn or broken threads, rust or corrosion.

(3) Inspect gear at rear of filter assembly housing, check for broken or chipped teeth, rust, or corrosion.

c. Cleaning.

(1) Clean metal surfaces with a cloth moistened with dry cleaning solvent.

(2) Clean each filter using lens tissue paper.

d. Repair Repair is limited to replacement of the filter assembly and stud.

e. Installation.

(1) Apply grease, MIL-G-23827, to teeth of gear at rear of the filter assembly housing and to the inside diameter of the mounting hole.

(2) Apply sealing compound, MIL-S-11031, to the threads of stud (9). Position filter assembly (10), secure with the stud.

3-18. Repair of Filter Assembly Operating Mechanism (Figs. 3-12 and 3-13)

a. Disassembly.

(1) Use adjustable spanner wrench to unscrew stud (11, fig. 3-12). Remove gear (12).

(2) Remove items 1 and 2, (fig. 3-13).

b. Inspection.

(1) Inspect hardware, check for broken or worn threads, rust or corrosion.

(2) Inspect gear, check for cracked, chipped or broken teeth, rust or corrosion.

c. Repair Repair is limited to replacement of worn or damaged parts.

d. Assembly.

(1) Apply a thin film of grease, MIL-G-23827, to the teeth of gear (12, fig. 3-12) and to the segment gear installed in housing.

(2) Apply sealing compound, MIL-S-11031, to threads of stud (11, fig. 3-12).

(3) Position gear to mesh properly with the segment gear. Secure with the stud.

(4) Install setscrew (2, fig. 3-13) until the tip extends inside the housing. Setscrews act as stops to the segment gear. Adjust setscrews to permit gear to run to the outer limits of the segment while maintaining mesh with gear (12).

(5) Apply a thin coat of sealing compound, MIL-S-11031, over head of setscrew and install setscrew (1, fig. 3-13) and again apply sealing compound, MIL-S-11031, over head of the setscrew.

3-19. Repair of Parallax Adjustment Mechanism (Fig. 3-13)

a. Disassembly.

(1) Unscrew item 3. Use adjustable spanner wrench to remove retainer (4).

(2) Remove screw (5) and peel packing (6) from groove of the screw.

b. Inspection.

(1) Inspect hardware and retainer, check for worn or broken threads, rust or corrosion.

(2) Inspect packing, check for wear or deterioration.

c. Cleaning.

(1) Clean metal parts with a cloth moistened with dry cleaning solvent.

(2) Clean packing in warm water with a mild soap. Dry thoroughly.

d. Repair. Repair is limited-to replacement of worn or damaged parts.

e. Assembly.

(1) Apply a thin film of grease, MIL-G-4343, to packing (6)and install in groove of screw (5).

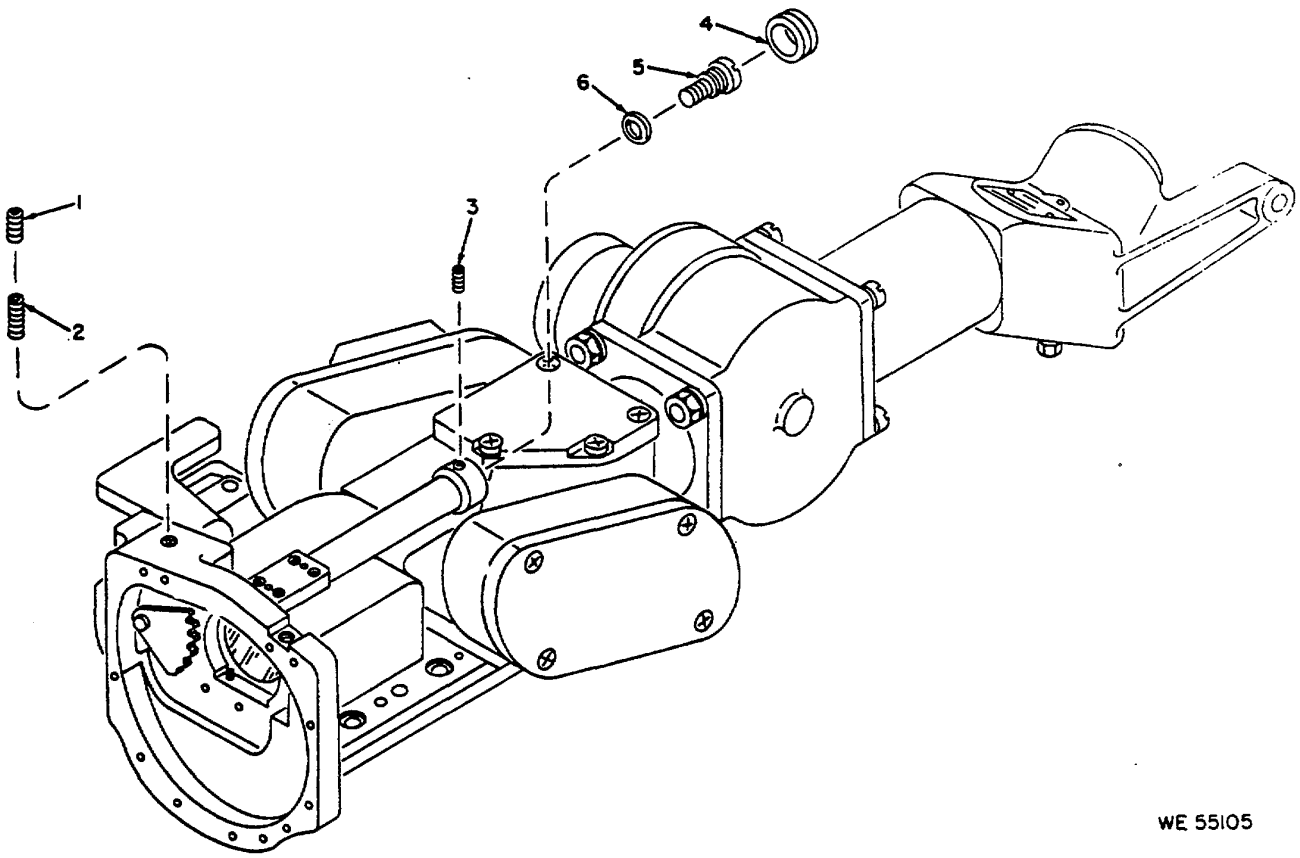

1 - Setscrew, 8-32 x 3/16, (2), MS51029-26
2 - Setscrew, 8-32 x 3/8, (2), MS51029-29
3 - Setscrew, 6-32 x 1/8, MS51045-18
4 - Retainer, 5/8-32 x 0.375 id, 10533426
5 - Screw, 1/4-28 x 1-1/4, 10533425
6 - Packing, 0.301 id, 8624710-8

Figure 3-13. Parallax adjustment mechanism partial exploded view.

(2) Insert screw into the threaded hole of the shaft.

(3) Screw retainer (4) into housing until flush with housing surface. Secure with setscrew (3).

3-20. Test and Adjustment

The telescope will be checked for all necessary electrical and mechanical functions that have been affected by repair or parts replacement. Use an external 24VDC electrical source to energize: the lamp to illuminate the selected reticle.

3-21. Purging and Charging

Purging and charging will be performed following the repair or replacement of an item that permits air to enter the sealed telescope or reticle projector assembly. These units will be independently purged and charged in accordance with procedures described in TM 750-116.

CHAPTER 4

MAINTENANCE OF MATERIEL USED IN CONJUNCTION WITH TELESCOPE M127 AND M127A1 (M127E1)

Section I. DESCRIPTION

4-1. Hanger Assembly (8, Fig. 1-1)

The hanger assembly 8570106 supports the eyepiece end of the telescope when installed in the vehicle. The hanger is machined to form a precise fit on the coaxial mounting lug extending from the eyepiece tube and attached at the other end, through a bearing, to a support bracket attached to the vehicle roof. The hanger assembly permits full articulation with nominal eyepiece displacement in a vertical line.

Section II. MAINTENANCE OF HANGER ASSEMBLY

4-2. Inspection

a. Inspect the general condition of all parts.

b. Inspect bearing for binding, rough movement, rust or corrosion.

c. Inspect hardware for rust or corrosion.

4-3. Repair of Hanger Assembly (Fig. 4-1)

a. Repair is limited to the replacement of the items 1 through 4.

b. Ring (4) is limited to replacement when removal of hanger assembly (5) from the turret roof is necessary. Refer to TM 9-2350-230-12, Figure 11-40.

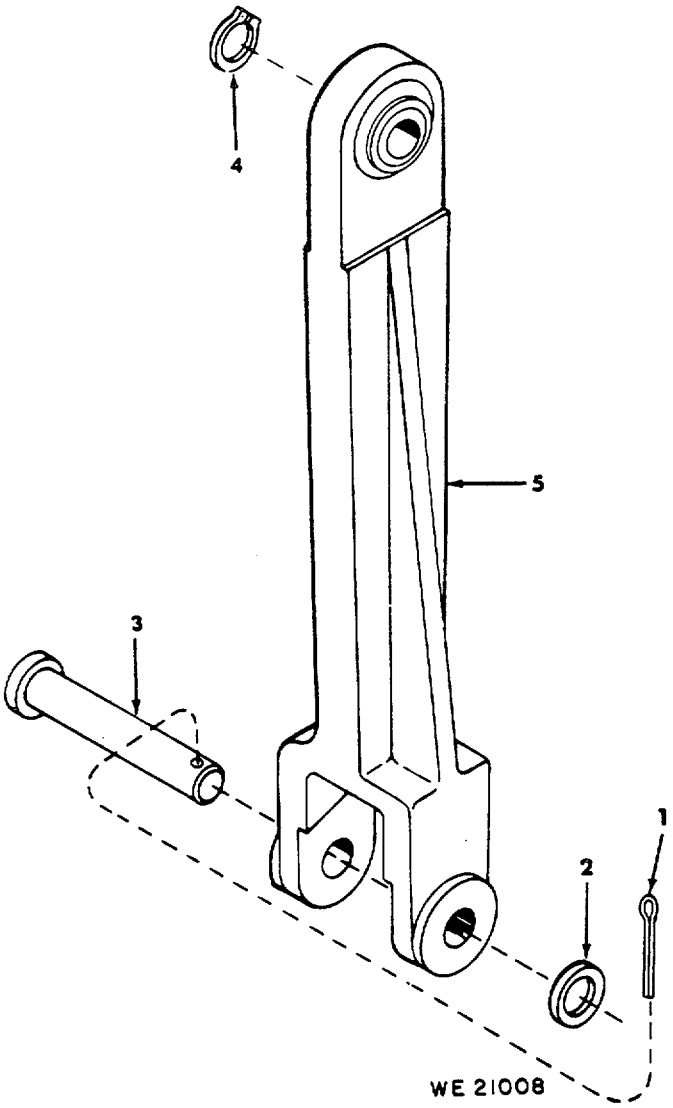

1 Pin cotter, 1/16 x 3/4, MS24665-153
2 Washer, flat, 0.406 id. MS15795-814
3 Pin, headed, 0.374 x 2-1/4, 10541750
4 Ring, 0.500 id MS16624-4050
5 Link 8570107

Figure 4-1. Hanger assembly--exploded view.

CHAPTER 5

FINAL INSPECTION

5-1. General

Final inspection is performed, after repair, to ensure the telescope is serviceable according to established standards and to certify the instrument for return to user.

5-2. Definition

The image will be sharp and clear at center of the field-of-view when checked with the aid of a dioptometer.

5-3. Eyepiece Focus

a. Adjust eyepiece of dioptometer until the reticle is sharp to the observer's eye.

b. Set dioptometer scale to zero (0) diopter.

c. Position dioptometer against eyepiece of the telescope and obtain a clear, sharp image of telescope reticle. The telescope diopter scale shall read zero (0) plus or minus 0.25 diopter when the target image is set at 1200 meters.

d. Sight through the eyepiece while rotating the diopter scale of the telescope to its clockwise stop and note the indexed setting. Rotate the diopter scale to its counterclockwise stop, and note the indexed setting. Eyepiece focus shall be adjustable over a minimum range of plus to minus 4 diopters. If requirement cannot be met, refer to paragraphs 3-7 a and g.

5-4. Parallax

a. Adjust diopter knob of telescope to obtain sharpest focus of the conventional and missile reticles. The line-of-sight through each reticle shall be directed at a target 1200 meters in distance.

b. Observe reticle lines in relation to target image. Any apparent movement of reticle lines when observer's head is moved from side to side or up and down is the amount of parallax. Parallax for each reticle shall not exceed 0.2 mil at the 1200 meter setting, with parallax adjustment screw (5, fig. 1-1) at midpoint of total mechanical travel. Parallax of targets at 600 meters or infinity shall not exceed 0.2 mil. Parallax between the telescope reticles shall not exceed 0.2 mil.

5-5. Filter Transfer Lever

The filter level shall be operable and seat firmly against the stops.

5-6. Optical Transfer Lever

The 8 to 12 power transfer lever shall be operable and seat firmly against the stops.

5-7. Lamp Housing Assemblies

The Lamp housing assemblies shall be mechanically operable to permit replacement of either lamp.

5-8. Reticle Illumination

The lines of each illuminated reticle shall be bright and clearly defined when observed with filter in the clear position. Any defect, in the form of a hole, crack, or chip appearing in the opaqued area of the reticle, shall not be brighter than the reticle lines. Such defect shall be cause for rejection.

APPENDIX A

REFERENCES

1. Supply Publications

The following Department of the Army Supply Manuals pertain to repair of this material:

Abrasive materials	C5350IL-A
Fire Control Maintenance and Repair Shop Specialized Equipment Tool Set. DS. GS. and Depot Maintenance. General Purpose Tools (4931-574-6433)	SC 4931-95-CL-J51
Fire Control Maintenance and Repair Shop Specialized Equipment Wrench Set. Spanner DS. GS, and Depot Maintenance: Tubr, Dble-End Concave Inserted Blade: Set of 76 Wrenches (4931-580-0012)	SC 4931-95-CL-J52
Miscellaneous Hardware	C5340-IL-A
Shop Set, Instrument and Fire Control, Field Maintenance: Basic Less Power (4931-754-0740)	SC 4931-95-CL-A07
Tool Kit. Fire Control Instrument Repairman (4931-947-8243)	SC 4931-95-CY-A09

2. Other Publications

a. General.

Accident Reporting and Records	AR 385-40
Army Maintenance Management System (TAMMS)	TM 38-750
Direct Support Maintenance Activities	FM 29-23
General Support Maintenance Activities	FM 29-24

b. Maintenance.

Direct Support and General Support Maintenance Repair Parts and Special Tools List (including Depot Maintenance Repair Parts) for Telescope Articulated: M127 (1240-437-1254), M127A1 (M127E1) (1240-148-8539) and Telescope Articulated M119 (1240-762-9333) and Hanger Assembly (1240-906-7945)	TM 9-1240-311-34P C1
General Maintenance Procedures for Fire Control Materiel	TM 9-254
Grease, Aircraft and Instrument Gear and Actuator Screw	MIL-G-23827
Grease, Pneumatic Systems	MIL-G-4343
Maintenance Assistance and Instruction Team (MAIT) Program	AR 750-51
Operator's and Organizational Maintenance Manual: Armored Reconnaissance Airborne Assault Vehicle, FT, 152MM, M551	TM 9-2350-230-12
Organizational, Direct Support, General Support, and Depot Maintenance Repair Parts and Special Tools Lists for Armored Reconnaissance-Airborne Assault Vehicle: FT, 152MM, M551	TM 9-2350-230-25P 2
Organizational Direct Support, and General Support, Maintenance Procedures for Purging and Charging of Fire Control Instruments	TM 750-116
Sealing Compound (N on-Curing)	MIL-S-11030
Sealing Compound (Adhesive Curing)	MIL-S-11031

c. Operations.

Northern Operations	FM 31-71
Operation and Maintenance of Army Materiel in Cold Weather (0 to -65° F).	TM 9-207

d. Shipment and Storage.

Parts, Equipment and Tools for Army Material, Packaging and Packing of	MIL-P-14232/P10553175

By Order of the Secretary of the Army:

W. C. WESTMORELAND,
General, Limited States Army,
Chief of Staff.

Official:

VERNE L. BOWERS,
Major General, United States Army,
The Adjutant General.

Distribution:

To be distributed in accordance with DA Form 12-41 (qty rqr block No. 150) direct and general support maintenance requirements for Telescope, Articulated.

U.S. GOVERNMENT PRINTING OFFICE : 1985 O - 461-202 (11662)

TEAR ALONG PERFORATED LINE

RECOMMENDED CHANGES TO EQUIPMENT TECHNICAL PUBLICATIONS

THEN. . JOT DOWN THE DOPE ABOUT IT ON THIS FORM, CAREFULLY TEAR IT OUT, FOLD IT AND DROP IT IN THE MAIL!

SOMETHING WRONG WITH THIS PUBLICATION?

FROM: (PRINT YOUR UNIT'S COMPLETE ADDRESS)

DATE SENT

PUBLICATION NUMBER	PUBLICATION DATE	PUBLICATION TITLE

BE EXACT. . .PIN-POINT WHERE IT IS

PAGE NO.	PARA-GRAPH	FIGURE NO	TABLE NO.	IN THIS SPACE TELL WHAT IS WRONG AND WHAT SHOULD BE DONE ABOUT IT:

PRINTED NAME, GRADE OR TITLE, AND TELEPHONE NUMBER	SIGN HERE:

DA FORM 1 JUL 79 2028-2

PREVIOUS EDITIONS ARE OBSOLETE.

P.S.—IF YOUR OUTFIT WANTS TO KNOW ABOUT YOUR RECOMMENDATION MAKE A CARBON COPY OF THIS AND GIVE IT TO YOUR HEADQUARTERS.

PIN: 026627-0000